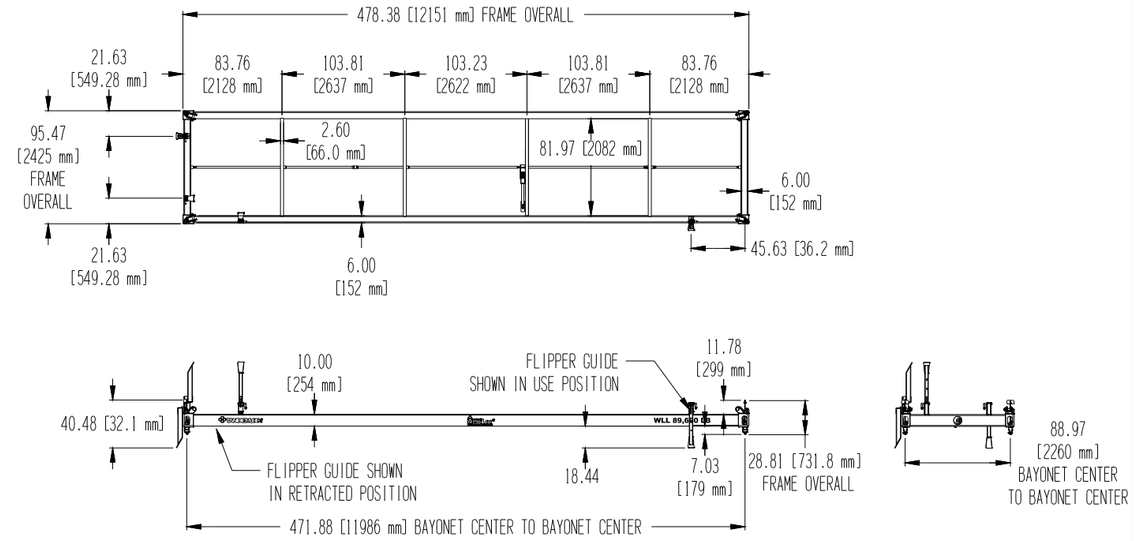

NOTES:
1. PART NO.: N31000E-4PA, 40' AUTOLOC SPREADER
2. OUTSIDE DIMENSIONS OF SPREADER (LENGTH AND WIDTH) ARE LESS THAN OUTSIDE DIMENSIONS OF LIFTED CONTAINER

UNLESS OTHERWISE SPECIFIED DIMENSIONS ARE IN INCHES TOLERANCES ARE: .XX ±.06 .XXX ±.030 CHECK IF APPLIC.	LIST MAX CASTING TOL. IS: 0° TO 4°±.030 4.00° TO 7°±.038 7.00° TO 10.5°±.045 OVER 10.5° ±52 CHECK IF APPLIC.	TANDEMLOC	
DO NOT SCALE DRAWING		TITLE	40' AUTOLOC SPREADER WLL 89,600 LB.
OVER 63 " ±1/1000 OF DIM.	DRAWN DAH 07-24-09		
THIS DOCUMENT CONTAINS DATA WHICH IS THE PROPERTY OF THIS COMPANY. DISCLOSURE, IN ANY MANNER WITHOUT THE WRITTEN AUTHORIZATION OF THIS AUTHORIZATION OF THIS COMPANY IS PROHIBITED	CHECKED	SIZE D	CAGE CODE 65059
	CHECK	DWG NO. SN31000E-4PA	REV. -
	DESIGN ACTIVITY	SCALE	SHEET 2 OF 2

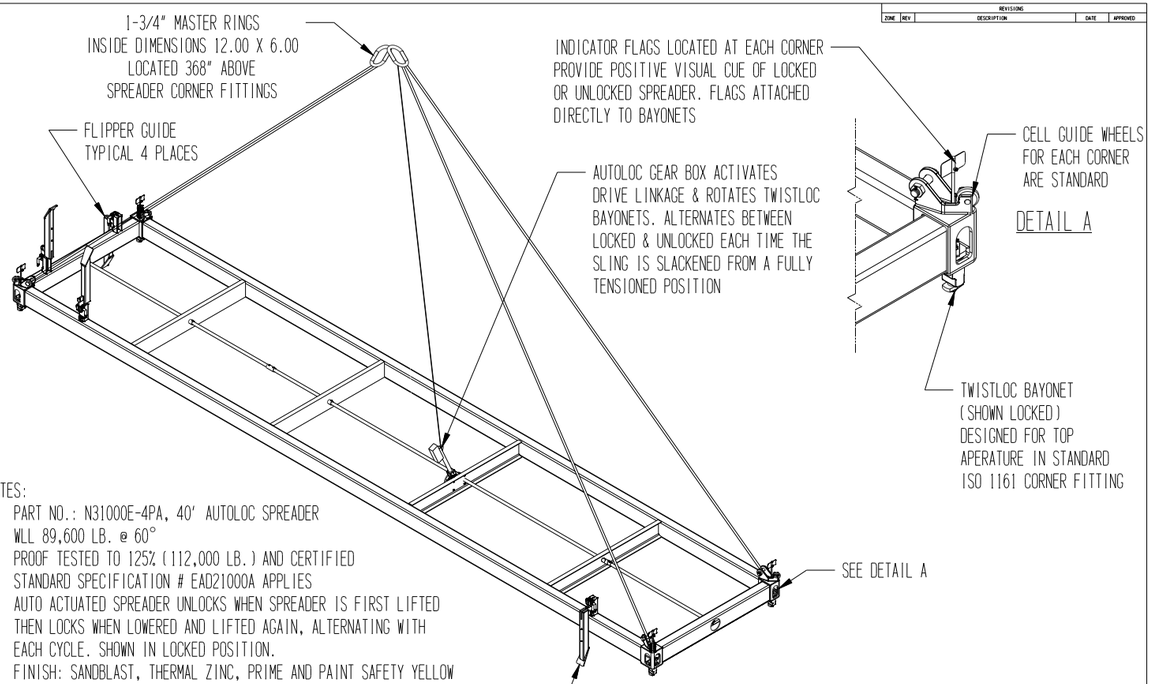

NOTES:
1. PART NO.: N31000E-4PA, 40' AUTOLOC SPREADER
2. WLL 89,600 LB. @ 60°
3. PROOF TESTED TO 125% (112,000 LB.) AND CERTIFIED
4. STANDARD SPECIFICATION # EAD21000A APPLIES
5. AUTO ACTUATED SPREADER UNLOCKS WHEN SPREADER IS FIRST LIFTED THEN LOCKS WHEN LOWERED AND LIFTED AGAIN, ALTERNATING WITH EACH CYCLE. SHOWN IN LOCKED POSITION.
6. FINISH: SANDBLAST, THERMAL ZINC, PRIME AND PAINT SAFETY YELLOW
7. CALCULATED WEIGHT: 5,555 LB.
8. DETAILED INFORMATION ON LISTED OPTIONS IS AVAILABLE UPON REQUEST
9. DESIGNED AND MANUFACTURED TO MEET OR EXCEED ASME B30.20, B30.9 AND BTH-1, DESIGN CATEGORY B, SERVICE CLASS 1.

UNLESS OTHERWISE SPECIFIED DIMENSIONS ARE IN INCHES TOLERANCES ARE: .XX ±.06 .XXX ±.030 CHECK IF APPLIC.	LIST MAX CASTING TOL. IS: 0° TO 4°±.030 4.00° TO 7°±.038 7.00° TO 10.5°±.045 OVER 10.5° ±52 CHECK IF APPLIC.	TANDEMLOC	
DO NOT SCALE DRAWING		TITLE	40' AUTOLOC SPREADER WLL 89,600 LB.
OVER 63 " ±1/1000 OF DIM.	DRAWN DAH 07-24-09		
THIS DOCUMENT CONTAINS DATA WHICH IS THE PROPERTY OF THIS COMPANY. DISCLOSURE, IN ANY MANNER WITHOUT THE WRITTEN AUTHORIZATION OF THIS AUTHORIZATION OF THIS COMPANY IS PROHIBITED	CHECKED	SIZE D	CAGE CODE 65059
	CHECK	DWG NO. SN31000E-4PA	REV. -
	DESIGN ACTIVITY	SCALE	SHEET 1 OF 2